Congratulations,

By purchasing the APPIA II you have made an excellent choice.

The purchase of a professional espresso coffee-maker involves various elements of selection: the name of the manufacturing firm, the machine's specific functions, its technical reliability, the option of immediate and suitable servicing, its price. You certainly evaluated all these factors and then made your choice: the APPIA II model.

We think you have made the best choice and after every coffee and cappuccino you will be able to assess this.

You will see how practical, convenient and efficient working with APPIA II is.

If this is the first time you have bought a **Nuova Simonelli** coffee machine, welcome to high quality coffee-making; if you are already a customer of ours, we feel flattered by the trust you have shown us.

Thanks of the preference.

With best wishes,

Nuova Simonelli S.p.a.

APPIA II

TECHNICAL CHARACTERISTICS

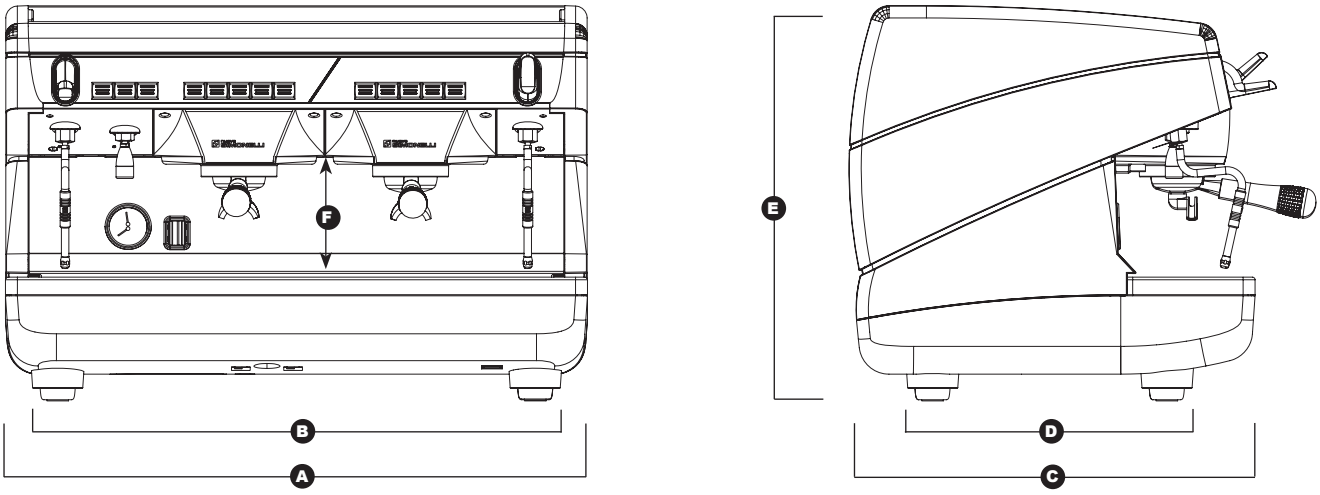

	2 Groups		3 Groups	
NET WEIGHT	54 kg	*119 lb*	72 kg	*159 lb*
GROS WEIGHT	66 kg	*145 lb*	85 kg	*187 lb*
POWER	3200 W	*3200 W*	5200 W	*5200 W*
DIMENSIONS	A 780 mm	A *30.9"*	A 1010 mm	A *39.76"*
	B 690 mm	B *27.16"*	B 920 mm	B *36.22"*
	C 545 mm	C *21.45"*	C 545 mm	C *21.45"*
	D 360 mm	D *14.17"*	D 360 mm	D *14.17"*
	E 530 mm	E *20.86"*	E 530 mm	E *20.86"*
	F 180 mm	F *7.08"*	F 180 mm	F *7.08"*

ENGLISH

APPIA II

INDEX

TECHNICAL CHARACTERISTICS 24

1. DESCRIPTION 27
1.1 ACCESSORIES LIST 28

2. SAFETY PRESCRIPTION 29
3. TRANSPORT AND HANDLING 32
3.1 MACHINE IDENTIFICATION 32
3.2 TRANSPORT 32
3.3 HANDLING 32

4. INSTALLATION AND PRELIMINARY OPERATIONS 33
5. ADJUSTMENTS TO BE MADE BY A QUALIFIED TECHNICIAN ONLY 34
5.1 PRESSURE SWITCH ADJUSTMENT 34
5.2 PUMP ADJUSTMENT 34
5.3 HOT WATER ECONOMISER ADJUSTMENT (optional V/S model) 35
5.4 PUSH-BUTTONPANEL REPLACEMENT 35

6. USE 36
6.1 APPIA V 36
6.1.1 SWITCHING THE MACHINE ON 36
6.1.2 SWITCHING THE MACHINE OFF 36
6.2 APPIA S 36
6.2.1 SWITCHING THE MACHINE ON 36
6.2.2 SWITCHING THE MACHINE OFF 36

6.3 SELECTION CONFIGURATION 36
6.4 MAKING COFFE 37
6.5 USING STEAM 37
6.6 MAKING CAPPUCCINO 37
6.7 HOT WATER SELECTION 37

7. PROGRAMMING APPIA V 38
7.1 PROGRAMMING DOSES 38
7.2 PROGRAMMING COFFEE DOSES 38
7.3 PROGRAMMING HOT WATER 38
7.4 PROGRAMMING THE CUP WARMER (optional) . . 38
7.5 PROGRAMMING STANDARD DOSES 39
7.6 COPYING DOSE SETTINGS 39
7.7 PROGRAMMING OPERATING PARAMETERS 39
7.8 AUTOMATIC GROUP CLEANING CYCLE 40

8. CLEANING AND MAINTENANCE 41
8.1 STOPPING THE MACHINE 41
8.2 CLEANING THE OUTSIDE OF THE MACHINE 41
8.3 CLEANING THE STAINLESS COFFEE-HOLDERS 41
8.4 CLEANING THE UNIT WITH THE AID OF THE BLIND FILTER 41
8.5 CLEANING FILTERS AND FILTER-HOLDERS 41
8.6 RESIN AND SOFTENER REGENERATION 42

9. APPIA V MACHINE FUNCTION MESSAGES 43

ELECTRIC SYSTEM APPIA S / 3 GR . . 68

ELECTRIC SYSTEM APPIA V 2 GR. . . . 70

ELECTRIC SYSTEM APPIA V 3 GR. . . 72

PLUMBING SYSTEM 74

BOILER DIAGRAM 2 GR. 76

BOILER DIAGRAM 3 GR. 77

ENGLISH

APPIA II

1. DESCRIPTION APPIA II V - S

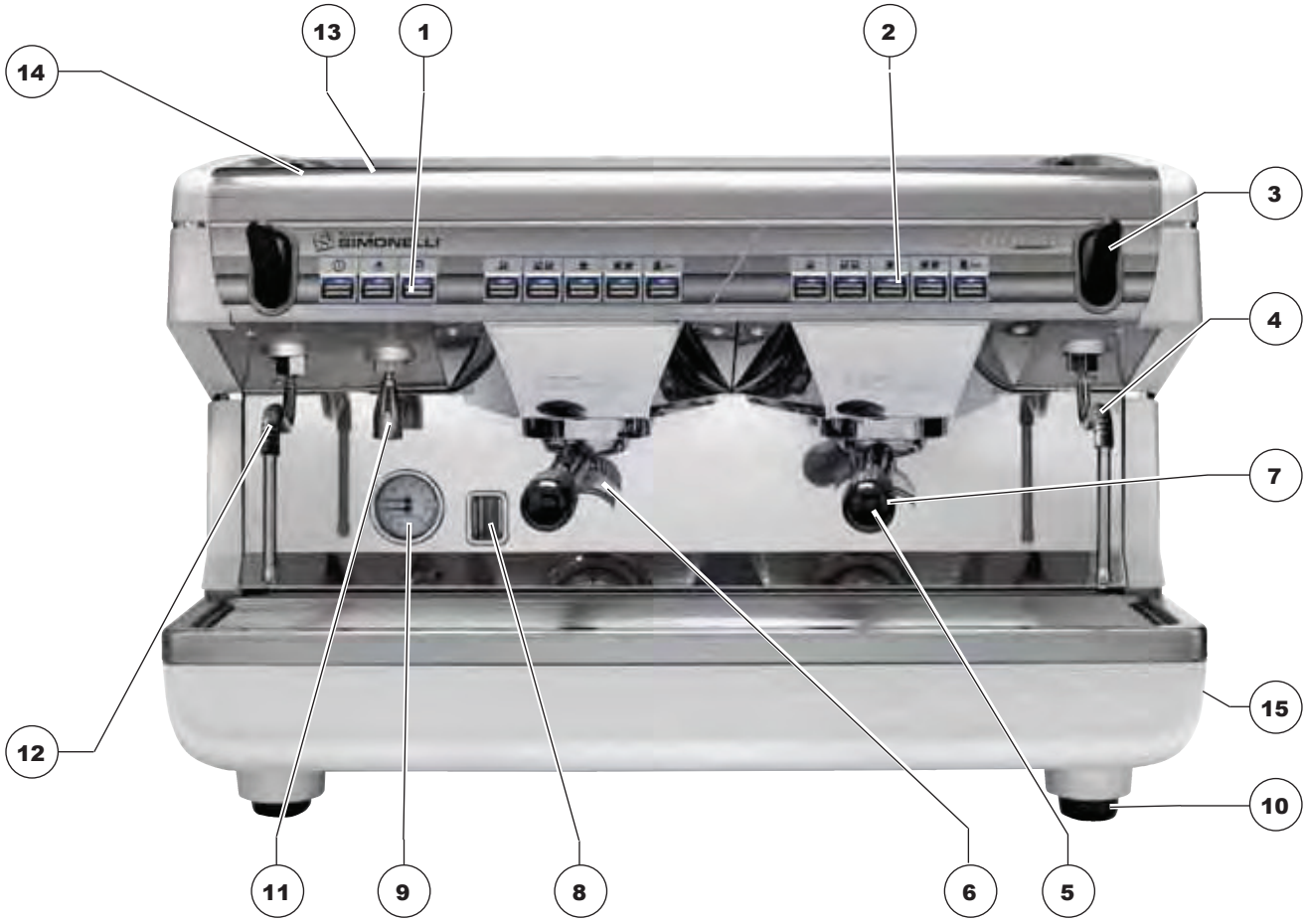

Fig. 1

KEY

1 Select buttons
2 Delivery buttons
3 Steam knob
4 Steam nozzle
5 Filter holder
6 Single delivery spout
7 Double delivery spout
8 Visual hot water level indicator
9 Pressure gauge
10 Adjustable foot
11 Hot water nozzle
12 Rating plate
13 Economiser regulator (optional)
14 Cup warmer (optional)
15 Main switch

1.1 ACCESSORIES LIST

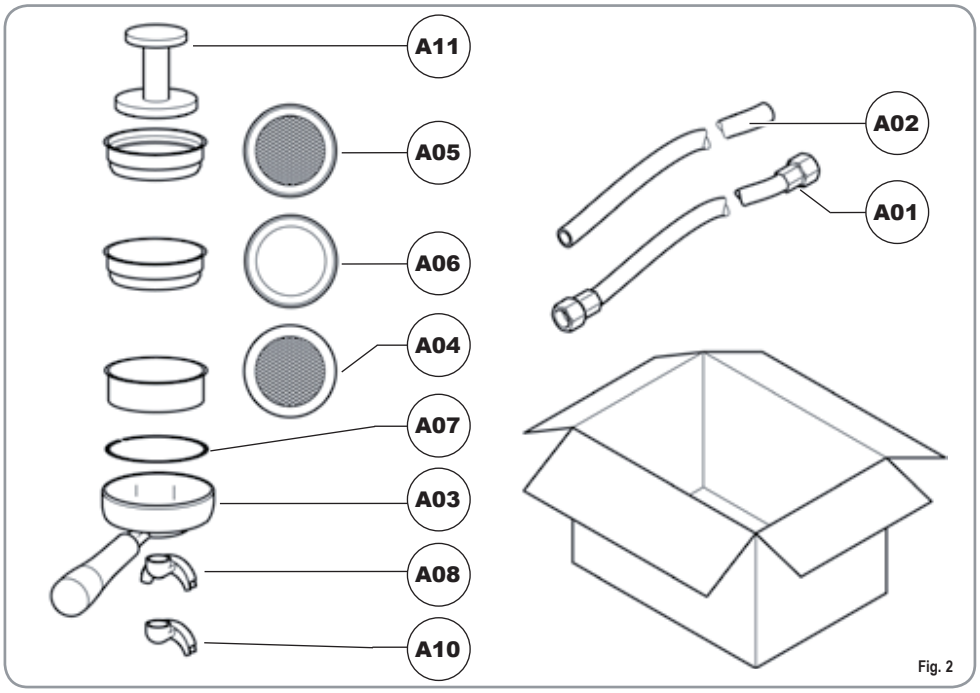

Fig. 2

CODE	DESCRIPTION	QUANTITY
A01	Filling tube ⅜"	1
A02	Waste pipe Ø 25 mm - L. 150 cm + sleeve	1
A03	Filter-holder	2
A04	Double filter	1
A05	Single filter	1
A06	Blind filter	1
A07	Spring	1
A08	Double delivery spout	1
A09	Single delivery spout	1
A10	Coffee presser	1

2. SAFETY PRESCRIPTION

This book is an integral and essential part of the product and must be given to the user. Read this book carefully. It provides important information concerning safety of installation, use and maintenance. Save it carefully for future reference.

After unpacking, make sure the appliance is complete. In case of doubts, do not use the appliance, but consult a qualified technician. Packaging items which are potentially dangerous (plastic bags, polystyrene foam, nails, etc.) must be kept out of children's reach and must not be disposed of in the environment.

RISK OF POLLUTION

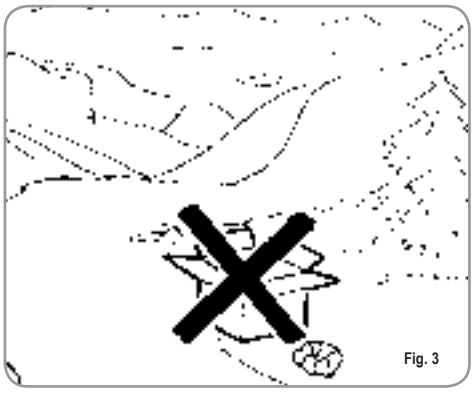

Fig. 3

Before connecting the appliance make sure the rating plate data correspond with the mains. This plate is on the front panel at the top right hand side of the appliance. The appliance must be installed by qualified technicians in accordance with current standards and manufacturer's instructions.
The manufacturer is not liable for any damage caused due to failure to ground the system. For the electrical safety of the appliance, it is necessary to equip the system with the proper grounding. This must be carried out by a qualified electrician who must ensure that the electric power of the system is sufficient to absorb the maximum power input stated on the plate.

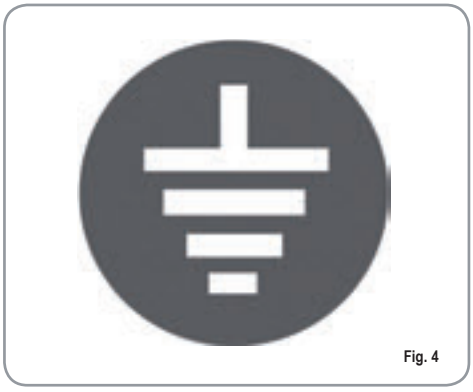

Fig. 4

In particular you must ensure that the size of the wiring cables is sufficient to absorb power input.
The use of adapters, multiple sockets or extensions is strictly forbidden. If they prove necessary, call a fully qualified electrician.

For appliances powered at 220 -230 V, the maximum impedance from the mains must be no higher than 0.37 Ohm.

When installing the device, it is necessary to use the parts and materials supplied with the device itself. Should it be necessary to use other parts, the installation engineer needs to check their suitability for use in contact with water for human consumption.

The machine must be installed in compliance with the local health standards in force for plumbing systems. Therefore, contact an authorized plumber.

The device needs to be supplied with water that is suitable for human consumption and compliant with the regulations in force in the place of installation. The installation engineer needs confirmation from the owner/ manager of the system that the water complies with the requirements and standards stated above.

The machine must be installed according to the local standards in force with regard to plumbing systems. For this reason, the plumbing connections must be carried out by a qualified technician.

This appliance must only be used as described in this handbook. The manufacturer shall not be liable for any damage caused due to improper, incorrect and unreasonable use.

This appliance is not suitable for use by children or persons with reduced physical, sensory or mental capabilities, or by persons with a lack of experience or knowledge, unless supervised or given instructions.

The maximum and minimum storage temperatures must fall within a range of [-5, +50]°C.

The operating temperature must be within the range of [+5, +35]°C.

At the end of installation, the device is switched on and taken to rated operating conditions, leaving it in a state in which it is "ready for operation".
The device is then switched off and the whole hydraulic circuit is bled of the first lot of water in order to remove any initial impurities.
The device is then refilled and taken to rated operating conditions.
After reaching the "ready for operation" condition, the following dispensing operations are carried out:
- 100% of the coffee circuit through the coffee dispenser (for more than one dispenser, this is divided equally);
- 100% of the hot water circuit through the water dispenser (for more than one dispenser, this is divided equally);
- opening of each steam outlet for 1 minute.

At the end of installation, it is good practice to draw up a report of the operations.

WARNING

The power cord may only be replaced by a Qualified Electrician, using an Original Replacement fitted with special earth wire, which is available from Authorised Assistance Centres.

WARNING

For machines not equipped with plugs to fit the mains power socket, it is necessary to fit the system with a disconnector to disconnect each phase.

Basic rules must be observed when using any electric appliance.

In particular:
- do not touch the appliance when hands or feet are wet;

CAUTION
RISK OF ELECTRIC SHOCK

- do not use the appliance when barefoot;
- do not use extensions in bath or shower rooms;
- do not pull the supply cord out of the socket to disconnect it from the mains;
- do not leave the appliance exposed to atmospheric agents (rain, sun, etc.);
- do not let the appliance be used by children, unauthorised staff or staff who have not read and fully understood the contents of this handbook.

Before performing any maintenance operation, the authorised service engineer must switch off the machine switch and unplug the machine or open the disconnector.

For all cleaning operations comply exclusively with the instructions given in this booklet.

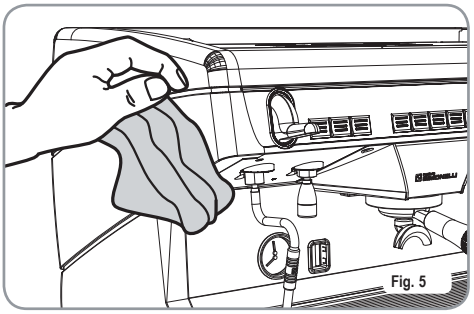

Fig. 5

If the appliance breaks down or fails to work properly, switch it off. Any intervention is strictly forbidden. Contact qualified experts only.
Repairs should only be made by the manufacturer or authorized service centres. Only original spare parts must be used. Failure to observe the above, could make the appliance unsafe.

For installation, the qualified electrician must fit an omnipolar switch in accordance with the safety regulations in force and with 3 (0,12) or more mm (in) between contacts.

To avoid dangerous overheating, make sure the supply cord is fully uncoiled.

Do not obstruct the extraction and/or dissipator grids, especially of the cup warmer.

The user must not replace the appliance supply cord. If the cord is damaged, switch off the appliance and have a qualified technician change the cord.

Single-phase appliances with current above 15 A and three-phase appliances sold without plugs are directly wired to the mains power and therefore, it is not possible to use a plug.

If no longer using the appliance, we recommend making it inoperative; after removing the plug from the mains electricity, cut the power supply cable.

CAUTION
RISK OF POLLUTION

Do not dispose of the machine in the environment: to dispose of the machine, use an authorised centre, or contact the manufacturer for relative information.

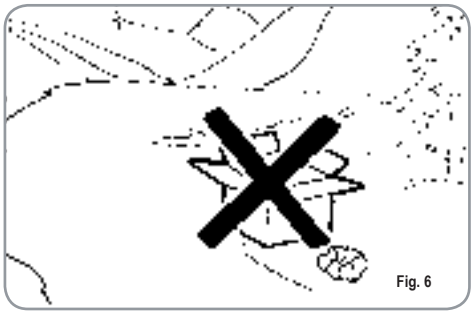

Fig. 6

CAUTION
RISK OF INTOXICATION

Use the steam nozzle with care and never place hands below the jet of steam. Do not touch the nozzle immediately after use.

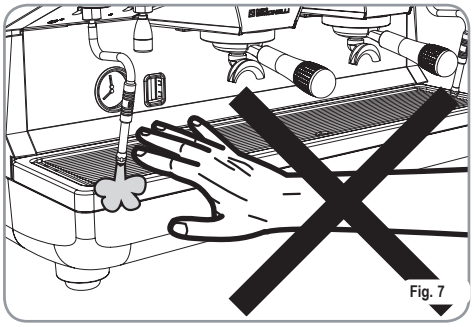

Fig. 7

CAUTION
RISK OF BURNS OR SCALDING

We remind you that before carrying out any installation, maintenance, unloading or adjustment operations, the qualified operator must put on work gloves and protective footwear.

The maximum noise disturbance level is lower than 70db.

If the pipe connecting to the mains water is replaced the old pipe must never be re-used.

CAUTION

INFORMATION TO THE USERS

Under the senses of art. 13 of Law Decree 25th July 2005, n. 151 "Implementation of the Directives/ Guidelines 2002/95/CE, 2002/96/CE and 2003/108/CE, concerning the reduction of the use of dangerous substances in electric and electronic equipment, as well as the disposal of wastes".

The symbol of the crossed large rubbish container that is present on the machine points out that the product at the end of its life cycle must be collected separately from the other wastes. The user for this reason will have to give the equipment that got to its life cycle to the suitable separate waste collection centres of electronic and electrotechnical wastes, or to give it back to the seller or dealer when buying a new equipment of equivalent type, in terms of one to one. The suitable separate waste collection for the following sending of the disused equipment to recycling, the dealing or handling and compatible environment disposal contributes to avoid possible negative effects on the environment and on the people's health and helps the recycling of the materials the machine is composed of. The user's illegal disposal of the product implies the application of administrative fines as stated in Law Decree n.22/1997" (article 50 and followings of the Law Decree n.22/1997).

3. TRANSPORT AND HANDLING

3.1 MACHINE IDENTIFICATION

Always quote the machine serial number in all communications to the manufacturer, Nuova Simonelli.

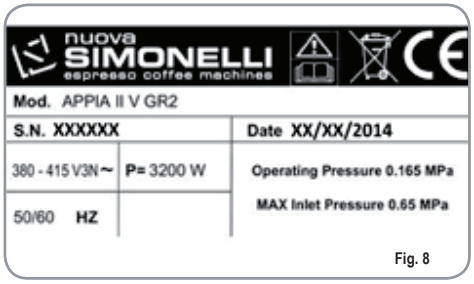

Fig. 8

3.2 TRANSPORT

The machine is transported on a pallet with other machines protected by cartons fastened to the pallet by straps.

Prior to carrying out any transport or handling operation, the operator must:

- put on work gloves and protective footwear, as well as a set of overalls which must be elasticated at the wrists and ankles.
  The pallet must be transported using a suitable means for lifting (e.g., forklift).

3.3 HANDLING

CAUTION

RISK OF IMPACT OR CRASHING

During all handling operations, the operator must ensure that there are no persons, objects or property in the handling area.
The pallet must be slowly raised to a height of 30 cm (11,8 in) and moved to the loading area. After first ensuring that there are no persons, objects or property, loading operations can be carried out.
Upon arrival at the destination and after ensuring that there are no persons, objects or property in the unloading area, the proper lifting equipment (e.g. forklift) should be used to lower the pallet to the ground and then to move it (at approx. 30 cm (11,8 in) from ground level), to the storage area.

CAUTION

RISK OF IMPACT OR CRASHING

Before carrying out the following operation, the load must be checked to ensure that it is in the correct position and that, when the supports are cut, it will not fall.
The operator, who must first put on work gloves and protective footwear, will proceed to cut the supports and to storing the product. To carry out this operation, the technical characteristics of the product must be consulted in order to know the weight of the machine and to store it accordingly.

4. INSTALLATION AND PRELIMINARY OPERATIONS

After unpacking, assess that the machine and its accessories unit are complete, then proceed as follows:

- place the machine so that it is level on a flat surface;
- assemble its supporting feet by inserting the insert into the cylindrical unit;
- twist the rubber foot into the screw thread inside the unit;
- screw the whole assembled unit into the allotted setting for the machine's adjustable feet;
- level the machine by regulating the adjustable feet;

NOTE: the unit grooves have to face upwards, as shown in the following illustration.

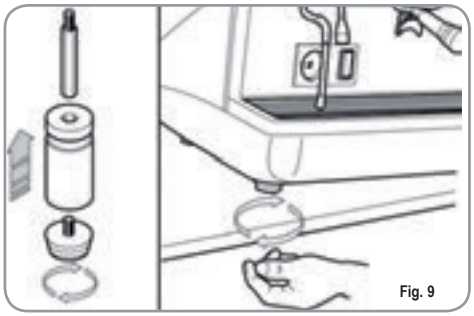

Fig. 9

It is advisable to install a softener (1) and then a mesh filter (2) on the external part of the plumbing system, during preliminaries and after levelling the machine. In this way impurities like sand, particles of calcium, rust etc will not damage the delicate graphite surfaces and durability will be guaranteed. Following these operations, connect the plumbing systems as illustrated in the following figure.

WARNING

Recommended mains pressure for the water is [2.3] bar.

WARNING

Avoid throttling in the connecting tubes. Assess that the drain pipe (3) is able to eliminate waste.

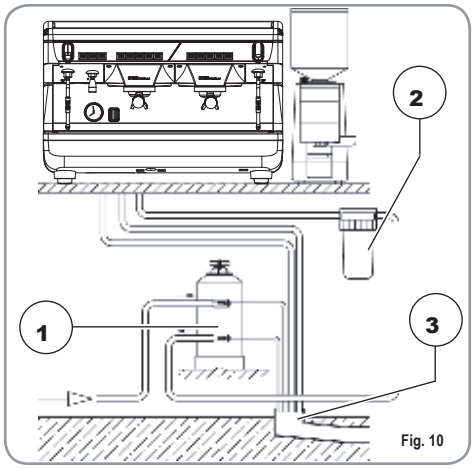

Fig. 10

KEY

1 Softener
2 Mesh filter
3 Drain Ø 50 mm

NOTE: For a correct functioning of the machine the water works pressure must not exceed 4 bars.
Otherwise install a pressure reducer upstream of the softener; the internal diameter of water entrance tube must not be less than 6mm (⅜").

CAUTION
RISK OF SHORT CIRCUITS

The machine must always be protected by an automatic omnipolar switch of suitable power with contact openings of equal distance or more than 3mm.
Nuova Simonelli is not liable for any damage to people or objects due to not observing current security measures.

Prior to connecting the machine to the electrical mains, assess that the voltage shown on the machine's data plate corresponds with that of the mains.
If it does not, carry out the connections on the basis of the available electrical line, as follows:

- for **V 380** / 3 phases voltage +Neutral:

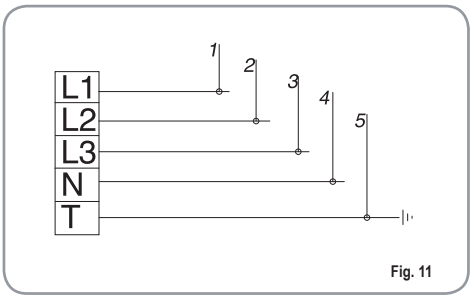

Fig. 11

- for **V 230** / monophase voltage

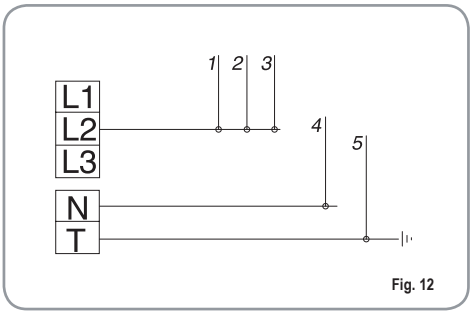

Fig. 12

KEY

1 Black
2 Grey
3 Brown
4 Blue
5 Yellow-green

NOTE: At the start of the day's activities and in any case, if there are any pauses of more than 8 hours, then it is necessary to change 100% of the water in the circuits, using the relevant dispensers.

NOTE: In case of use where service is continuous, make the above changes at least once a week.

5. ADJUSTMENTS TO BE MADE BY A QUALIFIED TECHNICIAN ONLY

CAUTION

The adjustments listed here below must ONLY be performed by a Specialist Technical Engineer.
Nuova Simonelli cannot be held liable for any damage to persons or property arising from failure to observe the safety instructions supplied in this manual.

CAUTION
ELECTRIC SHOCK HAZARD

Before performing any operation, the specialist technical engineer must first switch off the main switch off and unplug the machine.

5.1 FILLING BOILER MANUALLY

All models APPIA II are equipped with a level gauge to keep the water level inside the boiler constant.
When using the machine for the first time, it is advisable to fill the boiler by hand to avoid damaging the electrical resistor and turning on the electronic protection.
If this should happen, just turn the machine off and then start it up again to complete its loading procedure (see chapter "MACHINE FUNCTIONS MESSAGE – LEVEL ERROR").

To fill the boiler manually for the first time, proceed as follows:

- remove the worktop grid;
- Open the manual level tap "A" to allow water to enter the boiler.
- once the maximum level has been reached, as indicated by the optical level, turn tap "A" off;

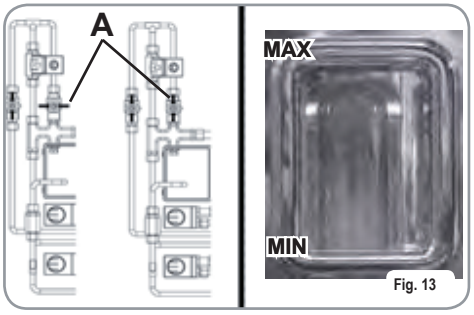

Fig. 13

- switch the machine on by placing the general switch on "**I**"; this will activate the level gauge which will automatically maintain the water level inside the boiler.

5.2 PRESSOSTAT / PUMP ADJUSTMENT

To adjust the service pressure of the boiler, thus regulating the water temperature, according to the various functions and needs of the coffee desired, proceed as follows:

- remove the worktop grid cover;
- remove the protective metal sheet by unscrewing the two side screws (A) as shown in the following illustration;

Fig. 14

- turn the pump registration screw, turning it clockwise to INCREASE and counter clock wise to DECREASE the pressure.

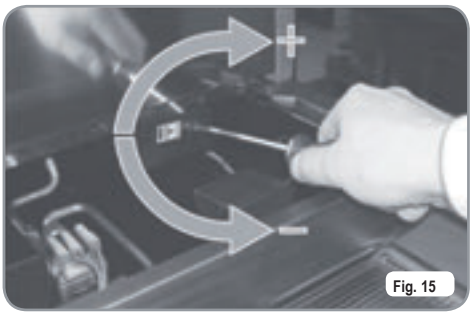
Fig. 15

Advisable pressure: *1 - 1,4 bar*
(according to the kind of coffee).

- turn the pump registration screw, turning it clockwise to INCREASE and counter clock wise to DECREASE the pressure.

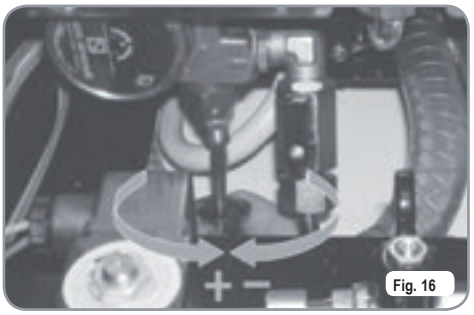
Fig. 16

Advisable pressure: *9 bar.*

• The set pump pressure is shown on the lower part of the gauge.

Fig. 17

Once the adjustment operation has been completed, screw the protective metal sheet back into its setting and replace the worktop grid cover.

5.3 HOT WATER ECONOMISER ADJUSTMENT (optional V / S model)

All APPIA II models are equipped with a hot water mixer that allows the regulation of the outlet temperature of the water and to optimise the performance of the system.
To adjust the hot water economiser, adjust the screw positioned to the left in the upper panel as shown in Fig. 18.
Utilising a flat blade screwdriver, turn in a clockwise direction to increase the temperature and in an anticlockwise direction to lower the temperature.

Fig. 18

5.4 PUSH-BUTTON PANEL REPLACEMENT

For correct functioning of the machine, personalising each button panel card at time of replacement is necessary; proceed as follows on the selectors placed on the card (on the key side).

GROUP	sw1	sw2	sw3	sw4	sw5	sw6
Group 1	On	Off	Off	On	Off	Off
Group 2	Off	On	Off	Off	On	Off
Group 3	Off	Off	On	Off	Off	On

6. USE

Before starting to use the appliance, the operator must be sure to have read and understood the safety prescriptions contained in this booklet.

6.1 APPIA V

6.1.1 SWITCHING THE MACHINE ON

- Plug the machine into the mains power socket.
- Set the main switch (no. 13, Fig 1) to “ON”.

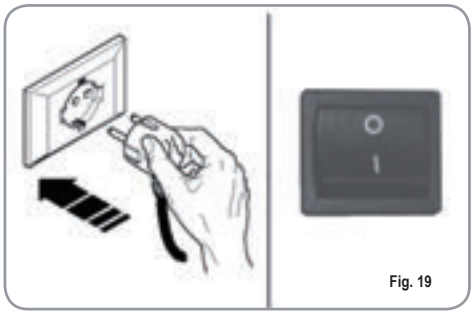

Fig. 19

The LED of the on key will begin to flash.

Hold down the on key for 5 seconds. At this point, the Flash-test will begin; this is where all LEDs are switched on for three seconds, after which the test is complete and the hot water key will switch off.

The fact that the machine is operating is shown by the LED of the on switch and all delivery keys, which remain lit.

NOTE: all selection keys are enabled from the end of the diagnostic operation.

WARNING

When servicing the electronic machine card, switch off the machine using the external main switch and unplug the power cord.

6.1.2 SWITCHING THE MACHINE OFF

- To switch off the machine, hold down the on/off key for about 2 seconds.

  The machine will switch off and the LED on the on/off key will start to flash again.
- Set the main switch to “OFF”.

6.2 APPIA S

6.2.1 SWITCHING THE MACHINE ON

- Plug the machine into the mains power socket and set the main switch to “ I ”.

6.2.2 SWITCHING THE MACHINE OFF

- Set the main switch to “O”.

6.3 SELECTION CONFIGURATION

Set the desired function on the available keys placed above the filter-holders (see chapter “DESCRIPTION”).

Fig. 20

BUTTONS KEY
(Selection configuration)

1 small coffee

2 small coffees

1 long coffee

2 long coffees

Continuous

ENGLISH

6.4 MAKING COFFEE

Unhitch the filter-holder and fill it with one or two doses of ground coffee depending on the filter used.

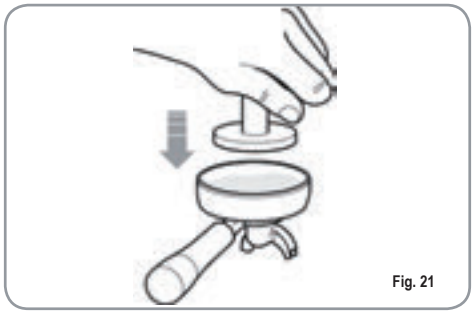

Fig. 21

Press the coffee with the provided coffee presser, dust off any coffee residue from the rim of the filter (this way the rubber gasket will last longer).
Insert the filter in its unit.
Press the desired coffee button:

1 small coffee	**2 small coffees**
1 long coffee	**2 long coffees**

By starting up the coffee brewing procedure the unit's pump is activated and the unit's solenoid valve is opened.
By pressing it, the button will turn on and signal the operation

NOTE: when in pause, leave the filter-holder inserted in the unit so that it will keep warm. To guarantee the utmost thermic stability during use, the delivery units are thermo-compensated with complete hot water circulation.

6.5 USING STEAM

CAUTION
RISK OF BURNS OR SCALDING

While using the steam nozzle, you must pay attention to not place your hands beneath it or touch just after it has been used.

To use steam just pull or push the provided lever (Fig. 22).
By pulling it completely the lever will hold a position of maximum delivery; by pushing it, the lever will automatically give way.
The two steam nozzles are articulated to guarantee their easy use.

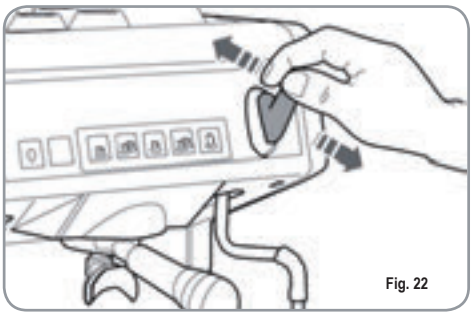

Fig. 22

NOTE: Before using the steam wand, always bleed out any condensation for at least 2 seconds or according to the manufacturer's instructions.

6.6 MAKING CAPPUCCINO

To obtain the typical cappuccino foam, immerse the nozzle all the way into a container 1/3 full of milk (preferably cone-shaped). Turn on the steam. Before the milk starts to boil, pull the nozzle slightly up and lightly move it vertically across the surface of the milk. When you have completed the procedure, clean the nozzle carefully with a soft cloth.

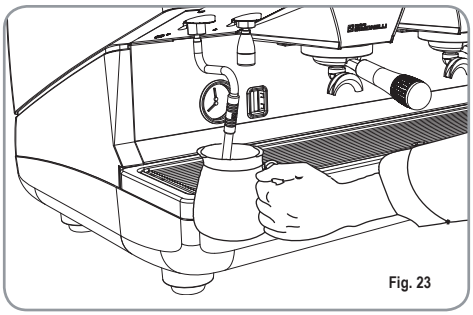

Fig. 23

6.7 HOT WATER SELECTION

CAUTION
RISK OF BURNS OR SCALDING

While using the hot water nozzle, pay careful attention not to place your hands beneath it or touch it just after it has been used.

This nozzle delivers hot water to make tea or herb teas.
Place a container underneath the hot water nozzle and press the switch (S model) or press the hot water select button (V model).

Make sure the button lights up.
Water will be delivered from the hot water nozzle for as long as the set time indicates.

NOTE: Hot water can be delivered at the same time as coffee.

ENGLISH

7. PROGRAMMING APPIA V

7.1 PROGRAMMING DOSES

To access the programming units, proceed as follows:

NOTE: the procedure can be carried out with the machine on.

- To enter the programming function for each group, it is necessary to hold down the continued delivery key for 5 seconds.
- The delivery keys will begin to flash.
- Accessing the programming mode for the first group also enables the setting mode for the machine's operating parameters.

7.2 PROGRAMMING COFFEE DOSES

To programme the amount of water for each of the delivery keys, proceed as follows:

- fill the filter holder with the right amount of coffee (the double or single filter holder can be used, according to the key to be programmed).
- Place the filter holder in the group.
- Press one of the delivery keys:

- The machine will begin to dispense and once the required quantity has been delivered, press the continued key .
- Delivery will cease and the selected dose key will switch off (the other keys will continue to flash).
- Press the continued key to exit the programming function or to continue programming other dose keys

NOTE: This procedure can be used for all groups on the machine, although it must be performed on one group at a time; the other groups will continue to operate as normal.

7.3 PROGRAMMING HOT WATER

- Use the relevant procedure to enter the programming function.
- Press the hot water selection key .
- Hot water delivery will begin.
- Decide the required amount of hot water and then press the key again
- Press the continued key to exit the programming function or to continue programming other selection keys.

7.4 PROGRAMMING THE CUP WARMER (optional)

- Enter the programming mode for the first group following the usual procedure.
- Press the cup warmer select key .
- The delivery buttons for the first and second group will respectively show the automatic switch on and off times, while the continuous keys for the first and second group will flash.

As shown in the table, each of the delivery keys has an associated value; the switch on time for the cup warmer is given by summing the values for the lit keys of the first group. The same calculation method is used for the switch off time of the cup warmer, using the keys of the second group.

Key	Group 1 (on time)	Group 2 (off time)
	2 min.	5 min.
	4 min.	10 min.
	8 min.	20 min.
	16 min.	40 min.

7.5 PROGRAMMING STANDARD DOSES

• It is possible to enter pre-set values for the 4 group doses and water (steam).

To do this, it is necessary to press the key and hold it down for at least 10 seconds until the flashing keys switch off.

The doses are:

1CN	2CN	1CL	2CL
40 cc	60 cc	50 cc	85 cc

WATER
9 sec.

NOTE: A time setting of 0 seconds for steam and water means this function will work continually.

7.6 COPYING DOSE SETTINGS

It is possible to copy the dose settings for group 1 to groups 2 or 3.

To do this, hold down the continuous key of the group 2 or 3 for at least 8

seconds until the keys stop flashing.

7.7 PROGRAMMING OPERATING PARAMETERS

CAUTION

The adjustments listed here below must ONLY be performed by a Specialist Technical Engineer

If you hold down the key of the second group, after first entering the programming mode for the first group, this will access the machine parameters setting mode; this is signalled by the continuous key for the second group, which will switch on.

1. Enabling the pump if the level is enabled.
2. Enabling the software block to enter the dose programming function.
3. Adjusting keypad brightness.
4. Enabling the hot water pump (on machines fitted with economiser).
5. Disenabling the cup warmer
6. Restoring default settings.

1. Enabling the pump during levelling.

Use the espresso key to set pump enabling during levelling:

if the key is lit, the pump is enabled together with the level; if it is switched off, the pump is not enabled with the level function.

2. Enabling the software block to enter the dose programming function.

Use the long coffee key to enable a software block to programme doses (key lit) or to de-activate the block (key off).

3. Adjusting keypad brightness..

The 2 long coffees key of the second group is used to choose the key brightness setting from 5 pre-set levels.

Use the key, which will flash, to change the level, lowering it to minimum or returning it to maximum.

4. Enabling the hot water pump (machines fitted with economiser only).

Use the hot water key to set the pump to switch on while hot water is being delivered.

If the key is lit, the pump will switch on while hot water is being delivered; if it is switched off, the pump will not switch on.

5. Disenabling the cup warmer.

Use the key to enable or disenable cup warmer operation. If the key is lit, the cup warmer will operate normally as set during programming; if the key is switched off, the cup warmer is disenabled.

If the cup warmer is not enabled, the key will only switch on during the Flash-test, after which this key will have no effect when pressed.

Press the continuous key of the second group to store the modified values and exit the page for setting machine operating parameters.

6. Restoring default settings

It is possible to restore default settings, i.e. pump level, water with pump, maximum brightness and cup warmer enabled.
To restore these parameters, it is sufficient to switch on the machine using the key

then to press the 2 espressos and 2 long coffees keys of the first group at the same time.

7.8 AUTOMATIC GROUP CLEANING CYCLE

To enter the automatic cleaning mode, switch the machine off and then on again, holding down the hot water and cup warmer keys during the initial Flash-test.

At the end of the Flash-test, the and keys and the single long coffee key of all groups will begin to flash.

Press the key to start the washing cycle for the relevant group.

Once the washing cycle has been completed, it is possible to perform a rinse cycle for the same group by pressing the 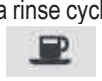 key again.

To perform the rinse cycle at a later time, switch off the machine and the card will store any cleaning cycles that need to be completed in its memory. In fact, the next time that the machine is switched on, the machine card will automatically open the group cleaning status without it being necessary to press the and keys.

Hold down the and keys for 2 seconds to exit the cleaning mode in the event that there are no cycles to be completed. For incomplete cycles, the 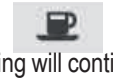 keys of the groups that require rinsing will continue to flash.

Hold down the and keys for 2 seconds more to force exit from the cleaning mode, resetting all information about rinse cycles still to be completed.

When a cleaning cycle is complete, the key for the group will switch off.

If there are no more rinse cycles to be performed, the card will exit the cleaning mode.

8. CLEANING AND MAINTENANCE

During maintenance/repairs, the parts used must be able to guarantee compliance with the safety and hygiene requirements envisaged for the device.

Original replacement parts can offer this guarantee. After repairs to/replacement of a part that comes into contact with foods or water, it is necessary to carry out a washing procedure or to follow the steps indicated by the manufacturer.

8.1 STOPPING THE MACHINE

To stop the machine, press the main switch and set it to OFF.

Fig. 24

8.2 CLEANING THE OUTSIDE OF THE MACHINE

The machine must be set to "O" power (switch off and disconnector open) before any cleaning operations are performed.

WARNING

Do not use solvents, chlorine-based products or abrasives.

WARNING

It is not possible to clean the machine using water jets or standing it in water.

Cleaning the work area: remove the worktop, lifting it up from the front and sliding it out. Remove the water collection dish underneath and clean everything with hot water and cleansers.
Cleaning the bottom: To clean all the chromium-plated areas, use a soft, damp cloth.

8.3 CLEANING THE STAINLESS COFFEE-HOLDERS

The stainless coffee-holders are situated under the delivery units, as shown in figure.

Fig. 25

NOTE: To clean proceed as follows:

- Turn the screw placed in the centre of the coffee-holder.
- Slide the coffee-holder out and check that its holes are not obstructed but clean.
- If obstructed, clean as described (Paragraph "CLEANING FILTERS AND FILTER-HOLDERS")
  We recommend cleaning the coffee-holder once a week.

8.4 CLEANING THE UNIT WITH THE AID OF THE BLIND FILTER

The machine is pre-set for cleaning the delivery unit with a specific washing powder.

We recommend carrying out a washing cycle at least once a day with special cleansers.

CAUTION
RISK OF INTOXICATION

Once the filter-holder has been removed, repeat delivery operations a few times to eliminate any cleanser residues.

To carry out the washing procedure, proceed as follows:

1) Substitute the filter with the delivery unit blind filter.
2) Fill it with two spoonfuls of special cleanser powder and insert it into the unit filter-holder.
3) Press one of the coffee keys and halt it after 10 seconds.
4) Repeat the procedure several times.
5) Remove the filter-holder and carry our a few deliveries.

8.5 CLEANING FILTERS AND FILTER-HOLDERS

Place two spoonfuls of special cleanser in half a litre of hot water and immerse filter and filter-holder (without its handle) in it leaving them to soak for at least half an hour. Then rinse abundantly with running water.

8.6 RESIN AND SOFTENER REGENERATION

To avoid scaling deposits in the boiler and in the heating exchangers, the softener must always be kept efficient. Therefore, the ionic resins must be regularly regenerated.
Regeneration times are established according to the quantity of coffee delivered daily and the hardness of the water utilised.
As an indication, regeneration times can be calculated on the basis diagram illustrated in Fig. 26.

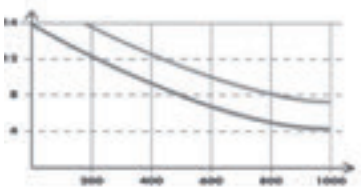

Fig. 26

Regeneration procedures are as follows:

1) Turn the machine off and place a container large enough to contain at least 5 litres under tube E (Fig. 27).
   Turn levers C and D from left to right; take the cap off by unscrewing knob and fill with 1 Kg normal kitchen salt (Fig. 28).

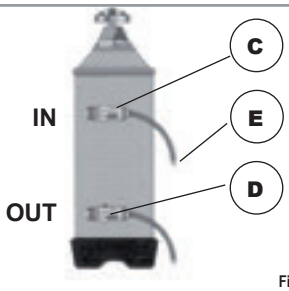

Fig. 27

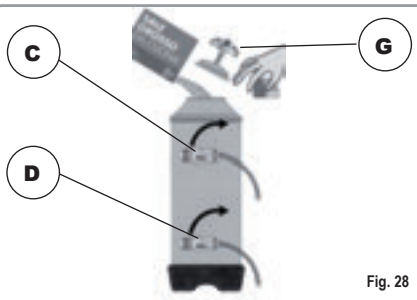

Fig. 28

2) Put the cap back on and reposition lever C moving it towards the left (Fig. 29) and allowing tube F to discharge the salty water until it has been eliminated and the water becomes fresh again (about half and hour).

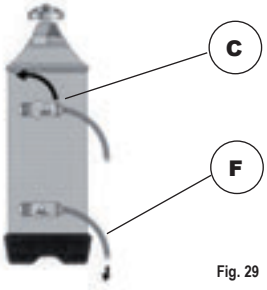

Fig. 29

3) Reposition lever D towards the left (Fig. 30).

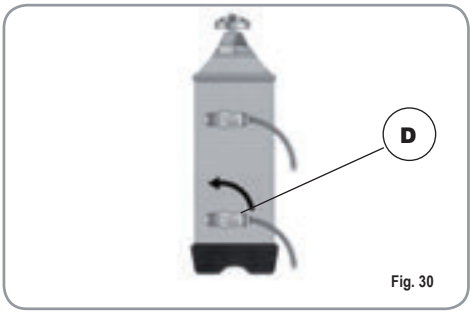

Fig. 30

9. APPIA V MACHINE FUNCTION MESSAGES

DISPLAY AND KEY INDICATIONS	CAUSE	EFFECT	SOLUTION	NOTES
Drawing of continued key flash hing and delivery key lit.	If the doser doesn't send out its set commands within the first three seconds from delivery onset.	If the delivery isn't manually halted, the maximum time limit (120 sec) will be blocked.	Interrupt delivery.	
Drawing of continued key flashing.	If within 90 sec. from onset, with pump inserted during the levelling, at 180 sec., if the level has not been re-established.	The pump, the resistor and all the functions will be halted.	Turn the machine off for at least 5 sec. and then switch it on again.	

IMPIANTO ELETTRICO ÆLECTRIC SYSTEM / INSTALLATION ELECTRIQUE Appia S 2/3 GR.

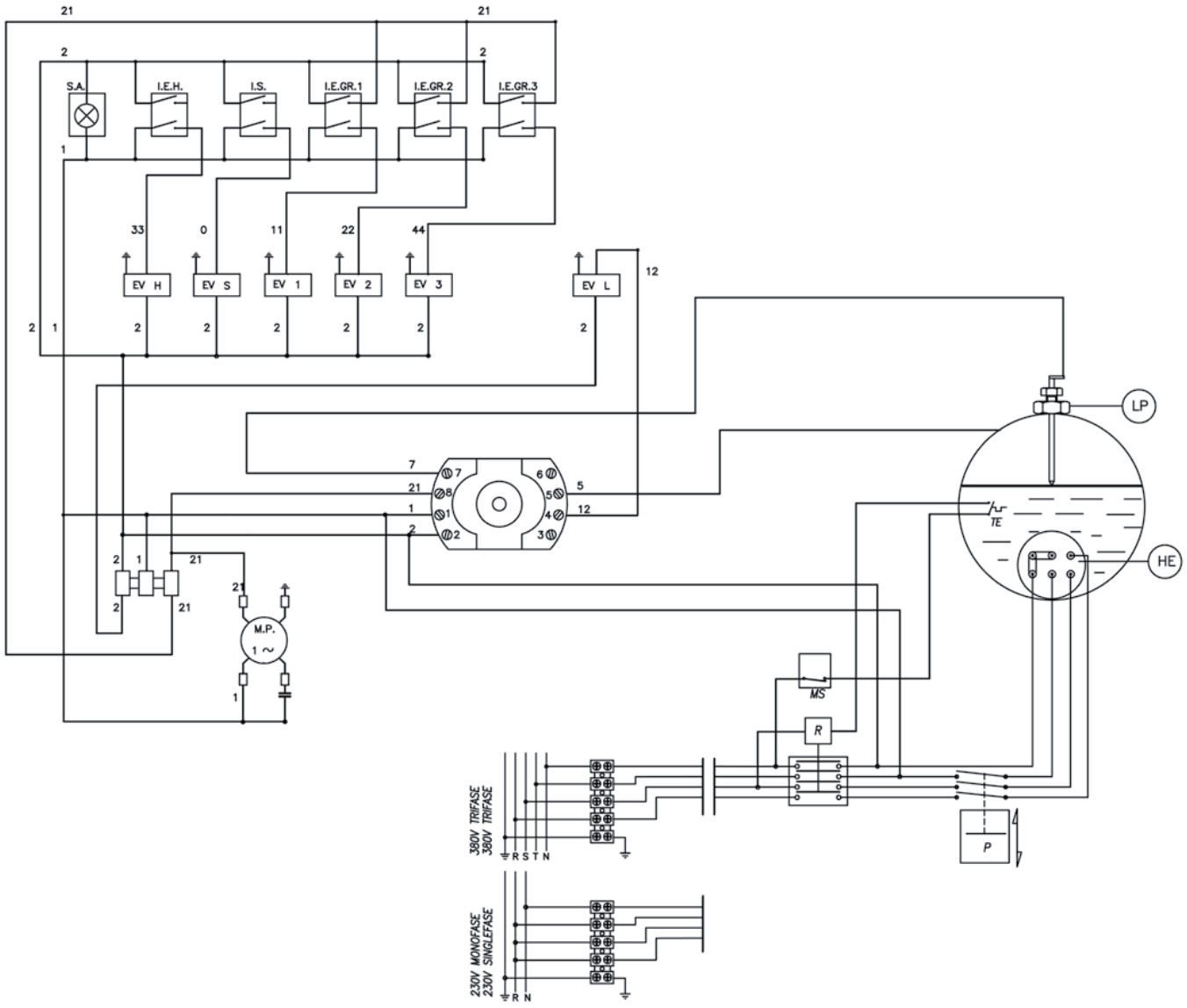

Fig. 33

IMPIANTO ELETTRICO /ELECTRIC SYSTEM / INSTALLATION ELECTRIQUE Appia S 2/3 GR.

LEGENDA

EV H
Elettrovalvola vapore/acqua calda
EV S
Elettrovalvola scaldatazze
EV1-2-3
Elettrovalvola erogazione gruppo
MP
Motore pompa
I.S
Interruttore scaldatazze
I.E.H.
Interruttore acqua calda
I.E.GR.1-2-3
Interruttore gruppo 1-2-3
R
Relè
P
Pressostato
EV L
Elettrovalvola livello
MS
Interruttore generale
HE
Resistenza
LP
Sonda livello
TE
Termostato sicurezza
S.A.
Lampada spia

KEY

EV H
Steam / hot water solenoivalve
EV S
Cup warmer solenoid valve
EV1-2-3
Group delivery solenoid valve
MP
Pump motor
I.S
Cup warmer switch
I.E.H.
Hot water switch
I.E.GR.1-2-3
Switch for groups 1-2-3
R
Relay switch
P
Pressure switch
EV L
Level solenoid valve
MS
Main switch
HE
Heating element
LP
Level probe
TE
Safety thermostat
S.A.
Indicator light

LÉGENDE

EV H
Electrovanne vapeur / eau chaude
EV S
Electrovanne chauffe-tasses
EV1-2-3
Electrovanne de distribution groupe
MP
Moteur pompe
I.S
Interrupteur chauffe-tasses
I.E.H.
Interrupteur eau chaude
I.E.GR.1-2-3
Interrupteur groupe 1-2-3
R
Relais
P
Pressostat
EV L
Electrovanne de niveau
MS
Interrupteur général
HE
Résistance
LP
Sonde niveau
TE
Thermostat de sécurité
S.A.
lampe témoin

IMPIANTO ELETTRICO ÆLECTRIC SYSTEM / INSTALLATION ELECTRIQUE Appia V 2 GR.

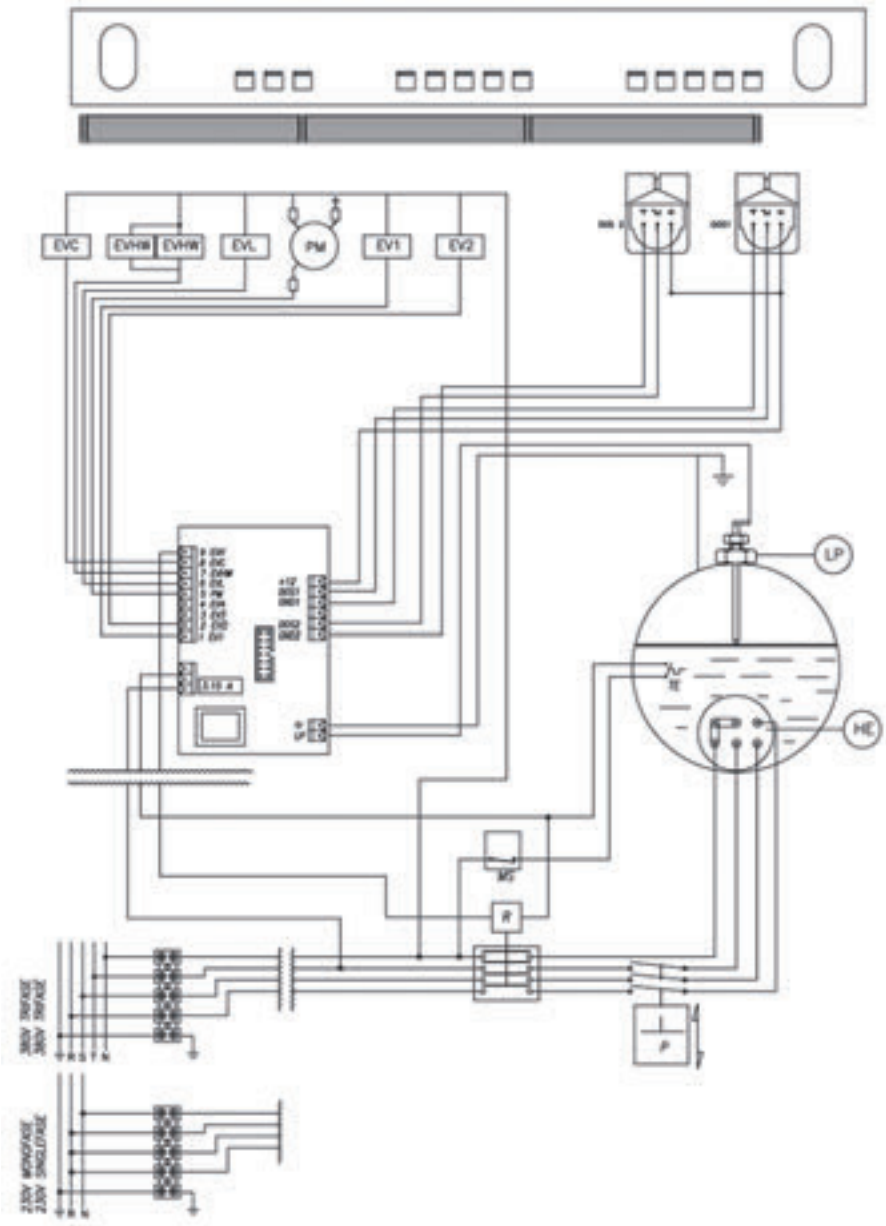

Fig. 34

IMPIANTO ELETTRICO ÆLECTRIC SYSTEM / INSTALLATION ELECTRIQUE Appia V 2 GR.

LEGENDA

EVC
Elettrovalvola scaldatazze
EVHW
Elettrovalcola miscelatore acqua calda
EV L
Elettrovalvola livello
EV1-2-3
Elettrovalvola erogazione gruppo
PM
Motore pompa
Dose
Ventolino
HE
Resistenza
LP
Sonda livello
TE
Termostato sicurezza
R
Relè
P
Pressostato
MS
Interruttore generale
TP
Sonda temperatura

KEY

EVC
Cup warmer solenoid valve
EVHW
Hot water mixer solenoid valve
EV L
Level solenoid valve
EV1-2-3
Group delivery solenoid valve
PM
Pump motor
Dose
Fan
HE
Heating element
LP
Level probe
TE
Safety thermostat
R
Relay switch
P
Pressure switch
MS
Main switch
TP
Sonda temperatura

LÉGENDE

EVC
Electrovanne chauffe-tasses
EVHW
Electrovanne mélangeur eau chaude
EV L
Electrovanne de niveau
EV1-2-3
Electrovanne de distribution groupe
PM
Moteur pompe
Dose
Ventilateur
HE
Résistance
LP
Sonde niveau
TE
Thermostat de sécurité
R
Relais
P
Pressostat
MS
Interrupteur général
TP
Sonde température

IMPIANTO ELETTRICO /ELECTRIC SYSTEM / INSTALLATION ELECTRIQUE Appia V 3 GR.

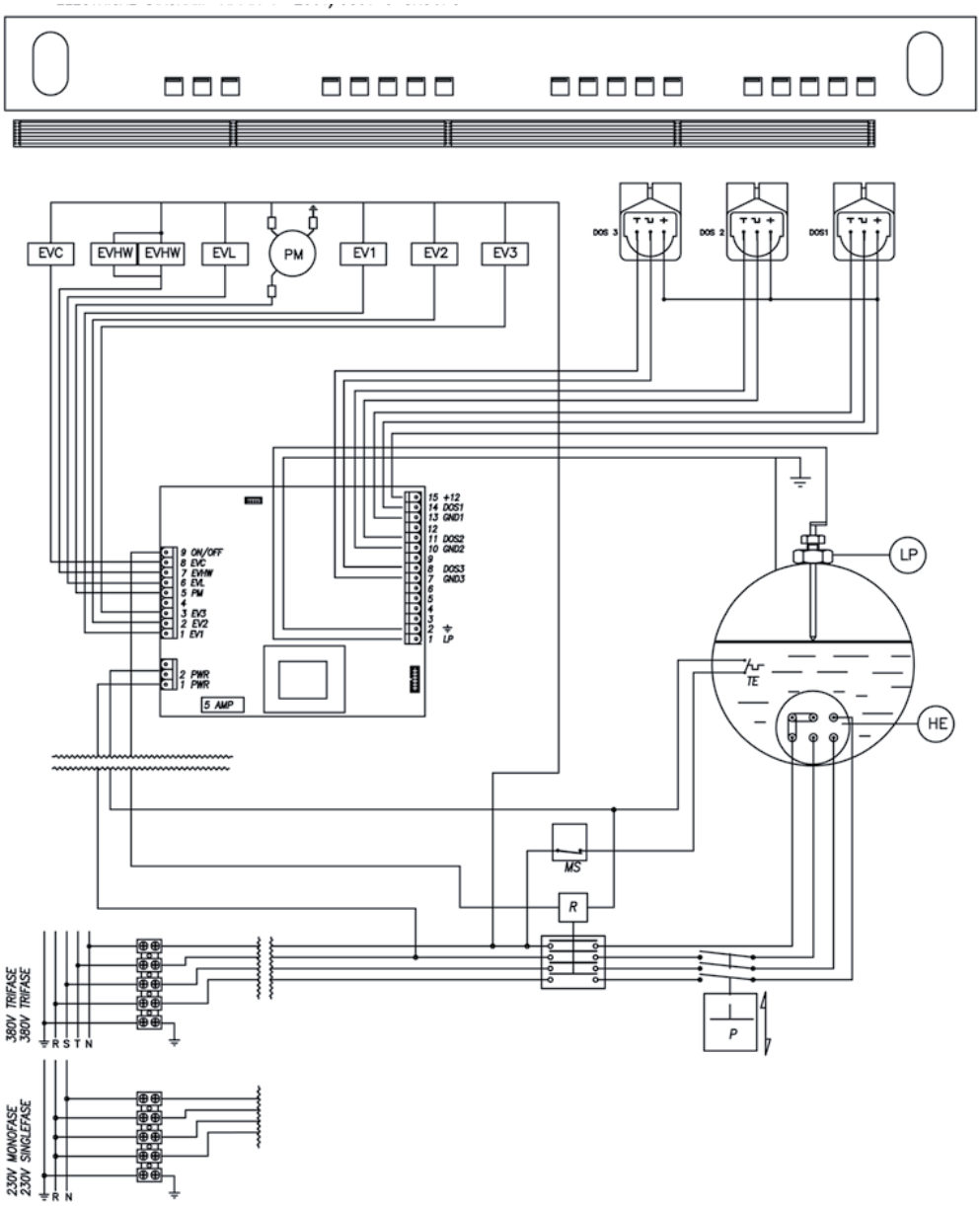

Fig. 35

IMPIANTO ELETTRICO /ELECTRIC SYSTEM / INSTALLATION ELECTRIQUE Appia V 3 GR.

LEGENDA

EVC
Elettrovalvola scaldatazze
EVHW
Elettrovalcola miscelatore acqua calda
EV L
Elettrovalvola livello
EV1-2-3
Elettrovalvola erogazione gruppo
PM
Motore pompa
Dose
Ventolino
HE
Resistenza
LP
Sonda livello
TE
Termostato sicurezza
R
Relè
P
Pressostato
MS
Interruttore generale
TP
Sonda temperatura

KEY

EVC
Cup warmer solenoid valve
EVHW
Hot water mixer solenoid valve
EV L
Level solenoid valve
EV1-2-3
Group delivery solenoid valve
PM
Pump motor
Dose
Fan
HE
Heating element
LP
Level probe
TE
Safety thermostat
R
Relay switch
P
Pressure switch
MS
Main switch
TP
Sonda temperatura

LÉGENDE

EVC
Electrovanne chauffe-tasses
EVHW
Electrovanne mélangeur eau chaude
EV L
Electrovanne de niveau
EV1-2-3
Electrovanne de distribution groupe
PM
Moteur pompe
Dose
Ventilateur
HE
Résistance
LP
Sonde niveau
TE
Thermostat de sécurité
R
Relais
P
Pressostat
MS
Interrupteur général
TP
Sonde température

IMPIANTO IDRAULICO /PLUMBING SYSTEM / INSTLACIÓN HIDRÁULICA

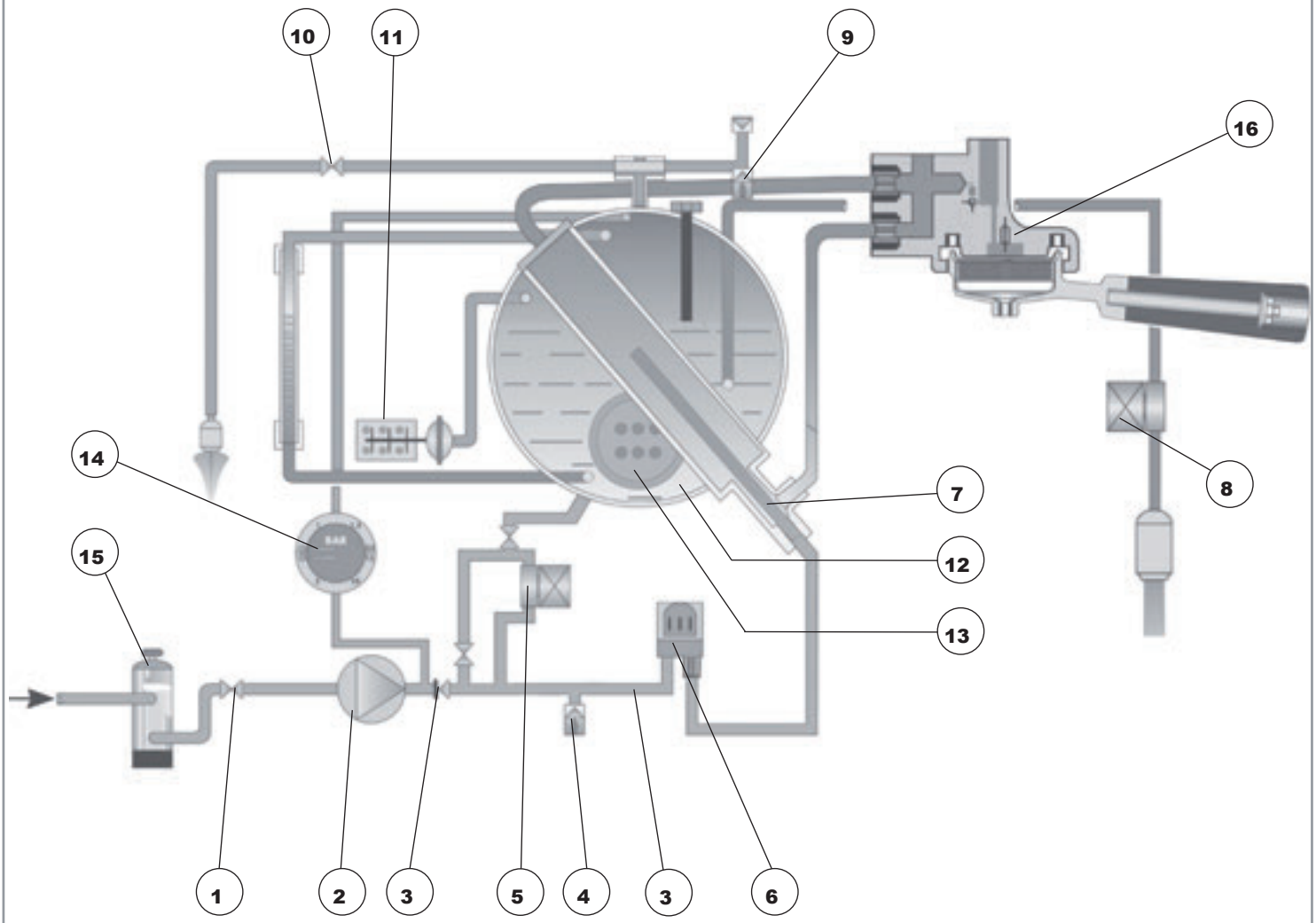

Fig. 36

IMPIANTO IDRAULICO /PLUMBING SYSTEM / INSTLACIÓN HIDRÁULICA

LEGENDA

1 Rubinetto ingresso acqua
2 Pompa
3 Valvola di ritegno
4 Valvola di espansione
5 Elettrovalvola di livello
6 Dosatore volumetrico
7 Scambiatore di calore
8 Elettrovalvola erogazione
9 Valvola di sicurezza cald.
10 Rubinetto vapore
11 Pressostato
12 Caldaia
13 Resistenza
14 Manometro doppia scala
15 Depuratore
16 Gruppo erogatore

KEY

1 Water entrance faucet
2 Pump
3 Retaining valve
4 Expansion valve
5 Refill electrovalve
6 Flowmeter
7 Heat exchanger
8 Delivery electrovalve
9 Heater safety valve
10 Steam tap
11 Pressostat
12 Boiler
13 Heating element
14 Double scale gauge
15 Purifier
16 Delivery unit

LÉGENDE

1 Robinet arrivée d'eau
2 Pompe
3 Soupape d'arrêt
4 Soupape d'expansion
5 Electrovanne de niveau
6 Doseur volumétrique
7 Echangeur de chaleur
8 Electrovanne de distribution
9 Soupape de sûreté chaudière
10 Robinet vapeur
11 Pressostat
12 Chaudière
13 Résistance
14 Manomètre double échelle
15 Dépurateur
16 Groupe de distribution

SCHEMA CALDAIA / BOILER DIAGRAM / SCHÉMA DE CHAUDIERE (2 gr.)

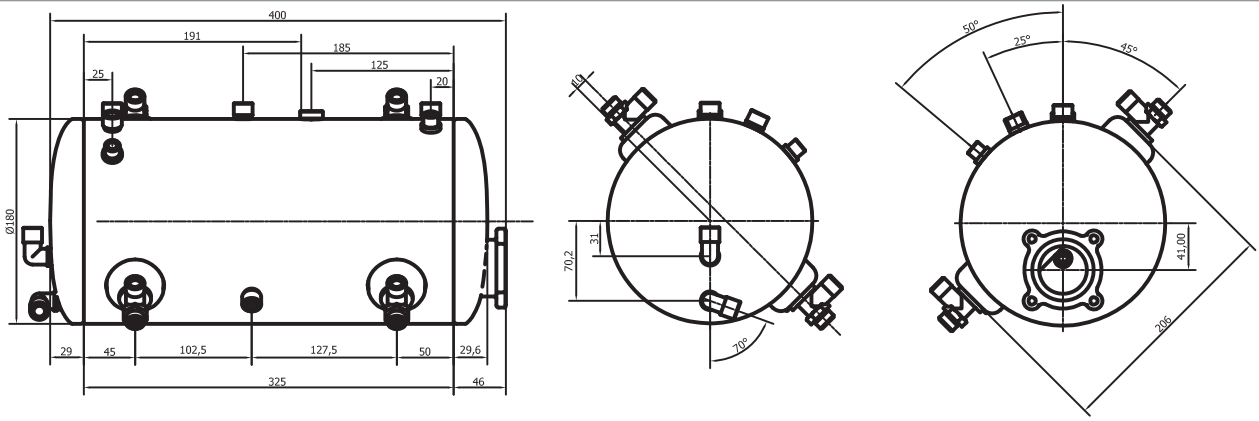

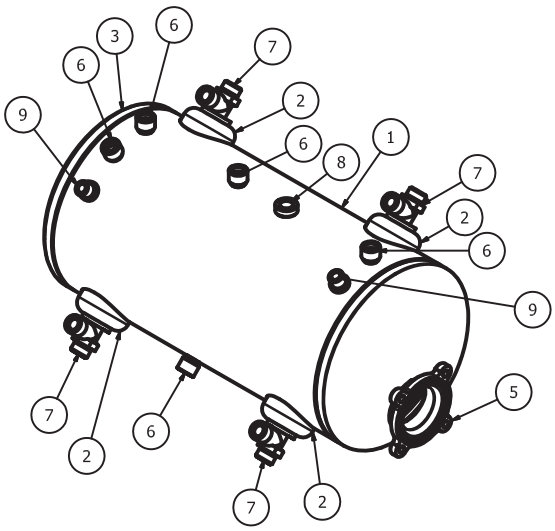

Elenco parti	List of Parts	Liste des composants		
ELEMENTO ELEMENT ELEMENT	QTÀ QTY QTE	NUMERO PARTE PART.NO NUM.COMPOSANT	DESCRIZIONE DESCRIPTION DESCRIPTION	MATERIALE MATERIAL MATERIAU
1	1	00015110	Virola caldaia D.180 2Gr Appia Virola boiler D.180 2Gr Appia Virole chaudière D.180 2Gr Appia	CU DHP 99.9
2	2	00160390	Tubo scambiatore Appia 1GR Exchanger pipe Appia 1GR Tube échangeur Appia 1GR	CU DHP 99.9
3	1	00010370	Coppa D.180 2 fori Bevel gear D.180 2 holes Coupe D.180 2 trous	CU DHP 99.9
4	1	00015090	Coppa D.180 PR 2013 Bevel gear D.180 PR 2013 Coupe D.180 PR 2013	CU DHP 99.9
5	1	00063130	Flangia Resistenza 4 fori 2013 Heater El. Flange 4 holes 2013 Flasque Resistance 4 trous	OT57 CW510L
6	5	00030251	Attacco 3/8'' Maschio Coupling 3/8'' Male Prise 3/8''Mâle	OT57 CW510L
7	4	00061462	Raccordo T scambiatore Appia Exchanger fitting T Appia Raccord en T échangeur Appia	OT57 CW510L
8	1	00030271	Attacco G1/4'' F Coupling G1/4'' F Prise G1/4'' F	OT57 CW510L
9	2	00030631	Attacco G 1/4'' M Coupling G1/4'' M Prise G1/4'' M	OT57 CW510L
10	2	00061551	Gomito a saldare 3/8 M Elbow for welding 3/8 M Coude à souder 3/8 M	OT57 CW510L

Materiale *Material* *Materiau*	*Trattamento* *Treatment* *Treatment*	*Tolleranza Tolerance* *Tolerance*	*Scala* *Scale* *Echelle*	*A2*
Rame **Copper** **Cuivre**		**Grossolana** **Coarse** **Grossier**	**1:2**	
Descrizione Description Description			*Data*	
Caldaia Boiler Chaudiere D.180 2 Gr 2013			**15/05/2013**	
Descrizione Description Description		*Designer*	*Codice code*	
Nuova Simonelli		**M.F.**	**90014750**	

DATI PROGETTO DIRETTIVA PED 97/23/CE PROJECT DATA FOR DIRECTIVE PED 97/23 CE DONNEES PROJECT DIRECTIVE PED 97/23 CE	
VOLUME	9.5 LT
TS	130.5° C
P.V.S.	1.8 Bar
PT	2.7 Bar
FLUIDO FLUID FLUIDE	H2O

Fig. 36

SCHEMA CALDAIA / BOILER DIAGRAM / SCHÉMA DE CHAUDIERE (3 gr.)

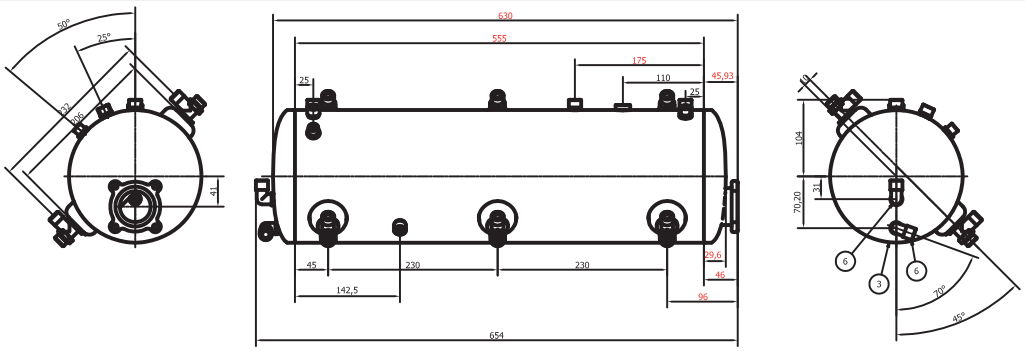

DATI PROGETTO DIRETTIVA PED 97/23/CE PROJECT DATA FOR DIRECTIVE PED 97/23 CE DONNEES PROJECT DIRECTIVE PED 97/23 CE	
VOLUME	15,3 LT
TS	130.5° C
P.V.S.	1.8 Bar
PT	2.7 Bar
FLUIDO FLUID FLUIDE	H2O

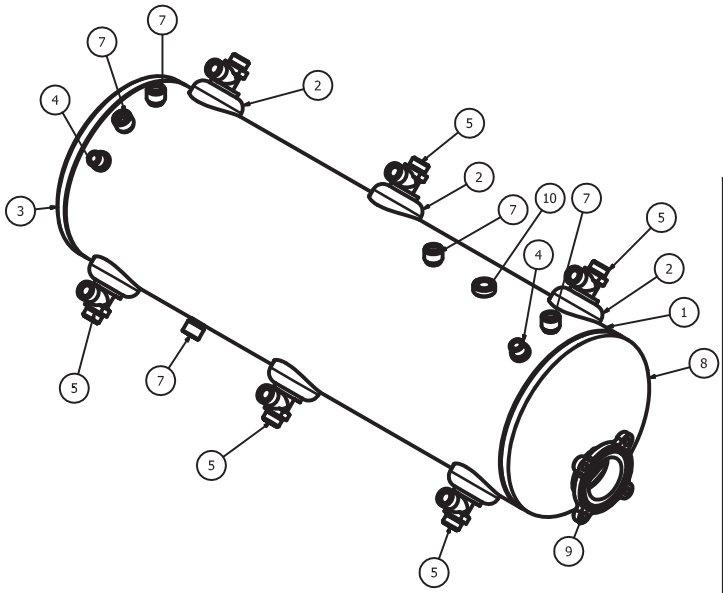

Materiale Material Materiau	Trattamento Treatment Treatment	Tolleranza Tolerance Tolerance	Scala Scale Echelle	A2
Rame,Ottone Copper,Brass Cuivre,Laiton		Media Average Moyenne	1:2	
Descrizione Description Description			Data	
Caldaia Boiler Chaudiere D.180 3 Gr 2013			15/05/2013	
Descrizione Description Description		Designer	Codice Code	
Nuova Simonelli		M.F.	90014770	

Elenco parti ELEMENTO ELEMENT ELEMENT	QTÀ QTY QTE	List of Parts NUMERO PARTE PART.NO NUM.COMPOSANT	Liste des composants DESCRIZIONE DESCRIPTION DESCRIPTION	MATERIALE MATERIAL MATERIAU
1	1	00015130	Corpo caldaia D.180 3Gr Appia SP1.2 Boiler body D.180 3Gr Appia 1.2 Corps Chaudière D.180 3Gr Appia SP1.2	CU DHP 99.9
2	3	00160390	Tubo scambiatore Appia 1GR Exchanger pipe Appia 1GR Tube échangeur Appia 1GR	CU DHP 99.9
3	1	00010370	Coppa D.180 2 fori Bevel gear D.180 2 holes Coupe D.180 2 trous	CU DHP 99.9
4	2	00030631	Attacco G1/4'' M Coupling G1/4'' M Prise G1/4'' M	OT57 CW510L
5	6	00061462	Raccordo T scambiatore Appia Exchanger fitting T Appia Raccord en T échangeur Appia	OT57 CW510L
6	2	00061551	Gomito a saldare 3/8 M Elbow for welding 3/8 M Coude à souder 3/8 M	OT57 CW510L
7	5	00030251	Attacco G 3/8'' Maschio Coupling G3/8'' Male Prise 3/8'' Mâle	OT57 CW510L
8	1	00015090	Coppa D.180 PR 2013 Bevel gear D.180 PR 2013 Coupe D.180 PR 2013	CU DHP 99.9
9	1	00063130	Flangia Resistenza 4 fori 2013 Heater El. Flange 4 holes 2013 Flasque Resistance 4 trous	OT57 CW510L
10	1	00030271	Attacco 1/4'' Maschio Coupling 1/4'' Male Prise 1/4'' Mâle	OT57 CW510L

NOTE: